FL7012

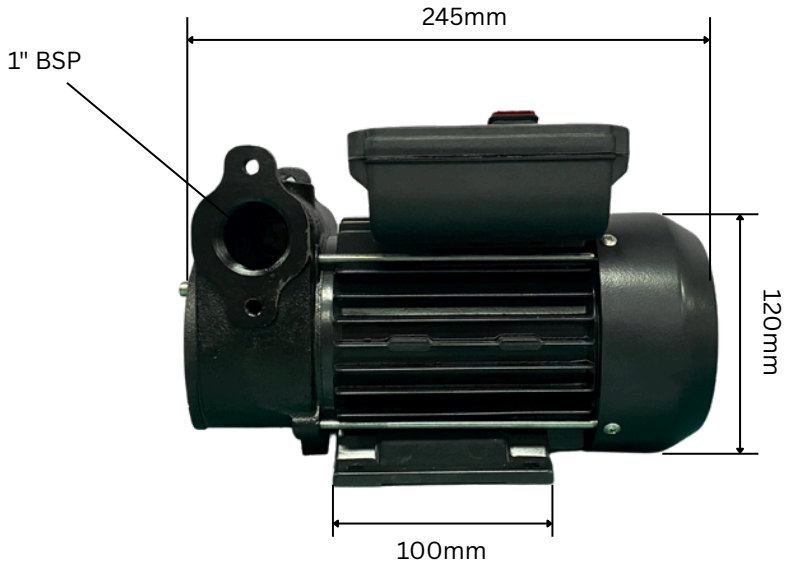

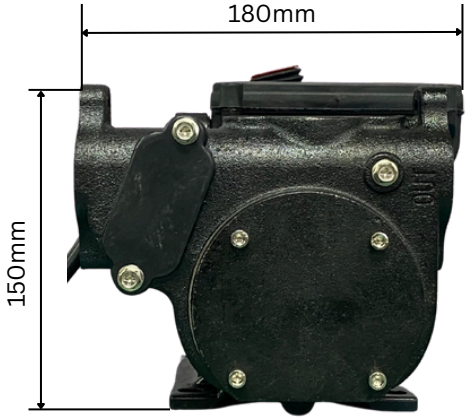



EQUIPCO®
INNOVATIONS IN FUEL HANDLING