# BLUWASH INDUSTRIAL SERIES PRESSURE WASHER

The Bluwash Industrial Series pressure washer, rated at 3500 PSI and 15 litres per minute (LPM), is a high-calibre machine engineered for rigorous industrial and commercial cleaning applications. Equipped with a HONDA® GX270 9 HP petrol engine, it offers reliable, fuel-efficient performance and consistent power delivery, even in the most challenging operating conditions.

The unit features a heavy-duty AAA triplex plunger pump, designed for exceptional durability, reduced maintenance, and superior pressure retention over extended use. Built on a robust yet lightweight aluminium frame, the washer combines strength with portability, ensuring resilience against corrosion and impact while remaining easy to manoeuvre. It is further enhanced by 13-inch foam-filled tyres, which provide excellent stability, puncture resistance, and smooth operation across rough or uneven terrain. Manufactured in the USA to stringent quality standards, the Bluwash Industrial Series reflects precision engineering and a commitment to long-term reliability.











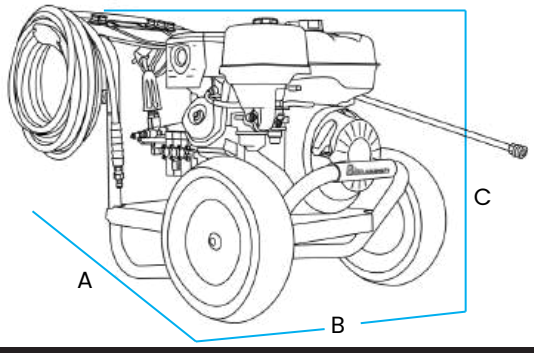


| ITEM CODE | DESCRIPTION | A | B | C | WEIGHT |
|---|---|---|---|---|---|
| BIS350015H | Bluwash Industrial Series 3500 PSI at 15 LPM HONDA® GX270 9 HP Petrol Engine Pressure Washer with AAA Triplex Pump. Industrial Series with Robust lightweight Aluminium Frame and 13" Foam Filled Tyres. Made in USA. | 965.2 mm | 584.2 mm | 685.8 mm | 56.7 kg |

# WARRANTY & TECHNICAL DETAILS



## HUGE WARRANTY

**10 YEARS WARRANTY FRAME**

**5 YEARS WARRANTY PUMP**

**3 YEARS WARRANTY ENGINE**

## UNIT INCLUDES

- Hose
- Lance
- Trigger gun
- Nozzles: 15°, 25°, 40°, and soap
- Engine oil 10W-30
- Low-pressure soap injector

### PUMP

**AAA® Industrial Triplex Pump**

- equipped with an integrated unloader and thermal relief valve

### ENGINE

**HONDA® GX270**

- equipped with a low oil shutdown feature

### FRAME

**Aluminum frame**

- crafted from high-grade aircraft aluminum, making it lightweight, durable, and corrosion-resistant

### HOSE

**Monster, 50 ft. dual braided high-pressure hose**

- kink and abrasion-resistant with a non-marring polyurethane outer jacket with QC fittings

### TIRES

**13 in. Premium Pneumatic Tires**

- for ease of maneuverability across various terrains

### NOZZLES

**5 Quick-connect Nozzle Tips**

- 0°, 15°, 25°, 40°, and soap nozzle for use on a variety of cleaning applications

| ITEM CODE | FUEL TYPE | DRIVE TYPE | PSI | HOSE | GUN | WAND |
|---|---|---|---|---|---|---|
| BIS350015H | Petrol | Direct | 3500 | Steel-braided Monster Hose 3/8 in. x 50 ft. | Rear load M22 connection side grip spray gun | 31 in. QC spray lance |

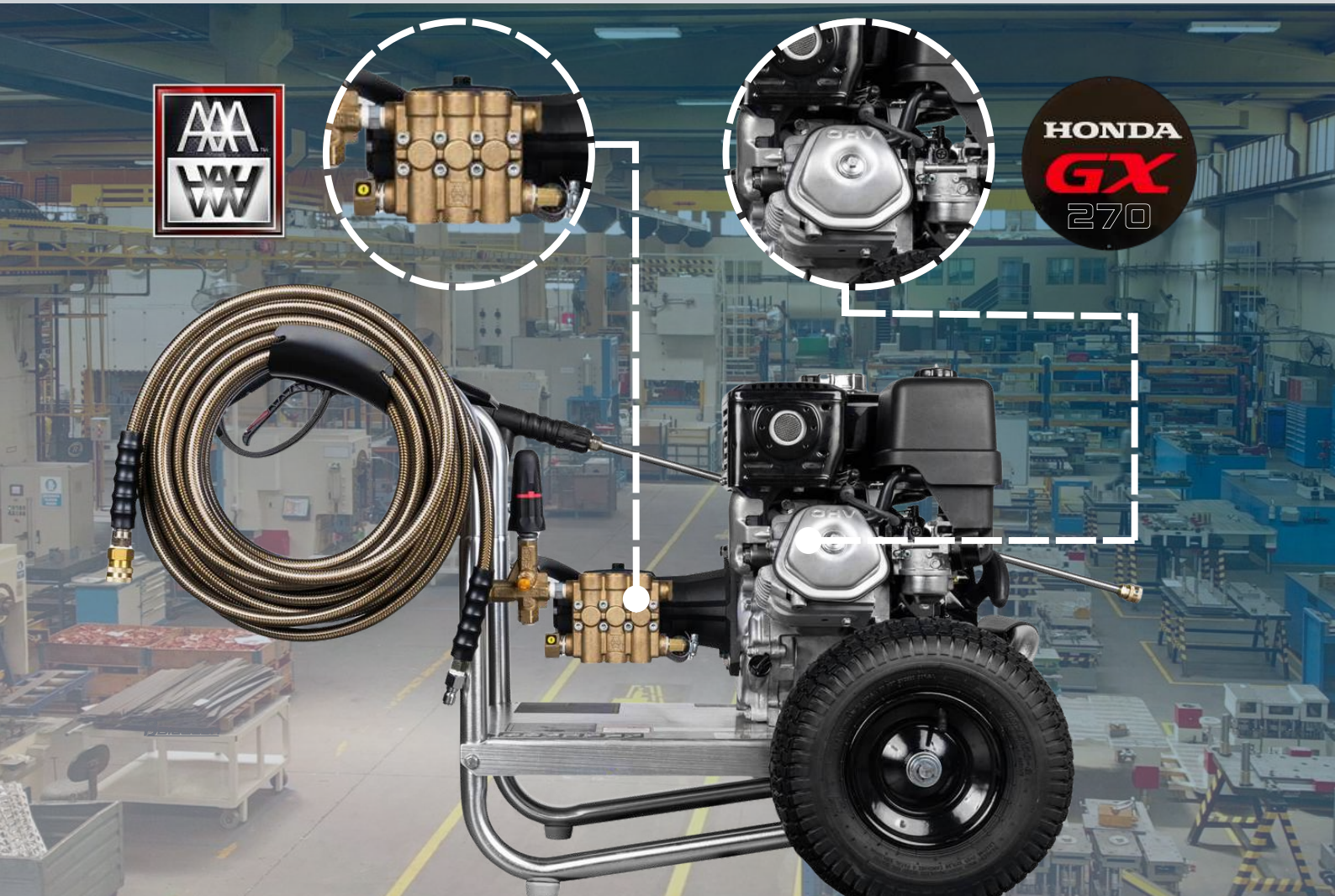

# PARTS AND COMPONENTS




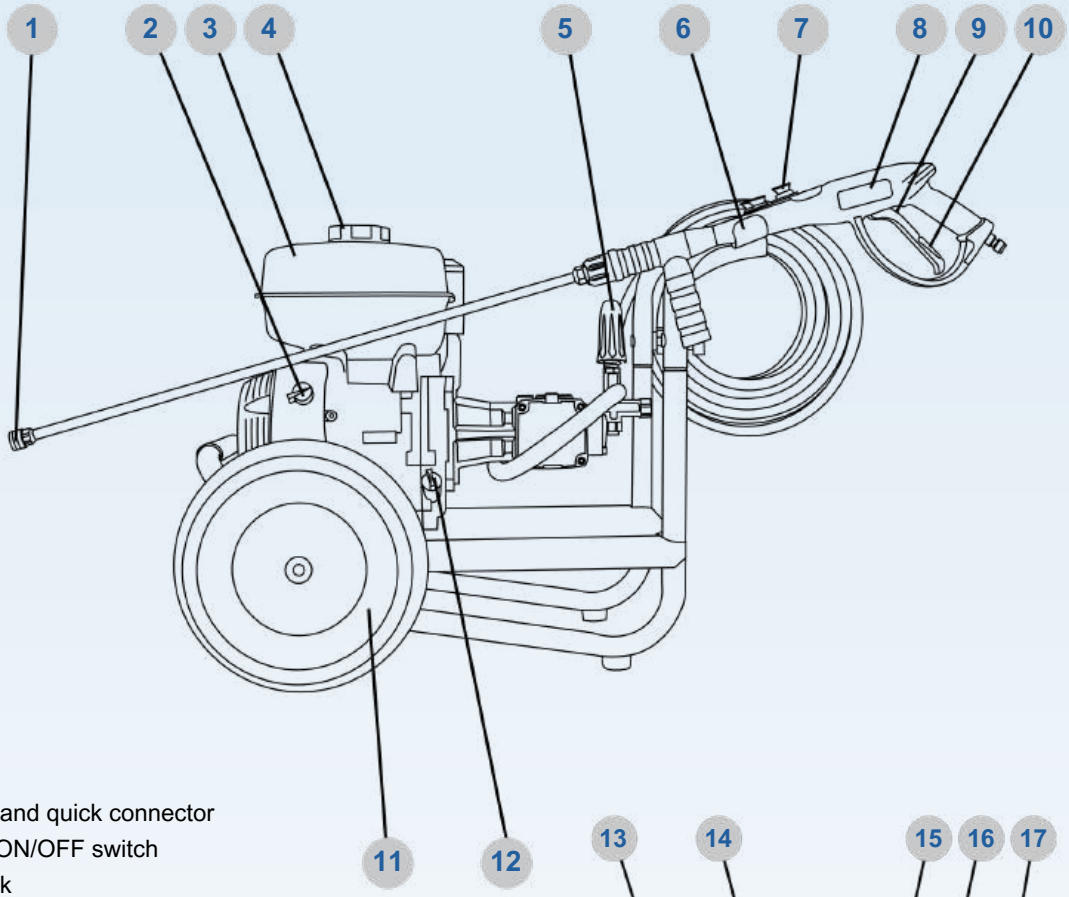


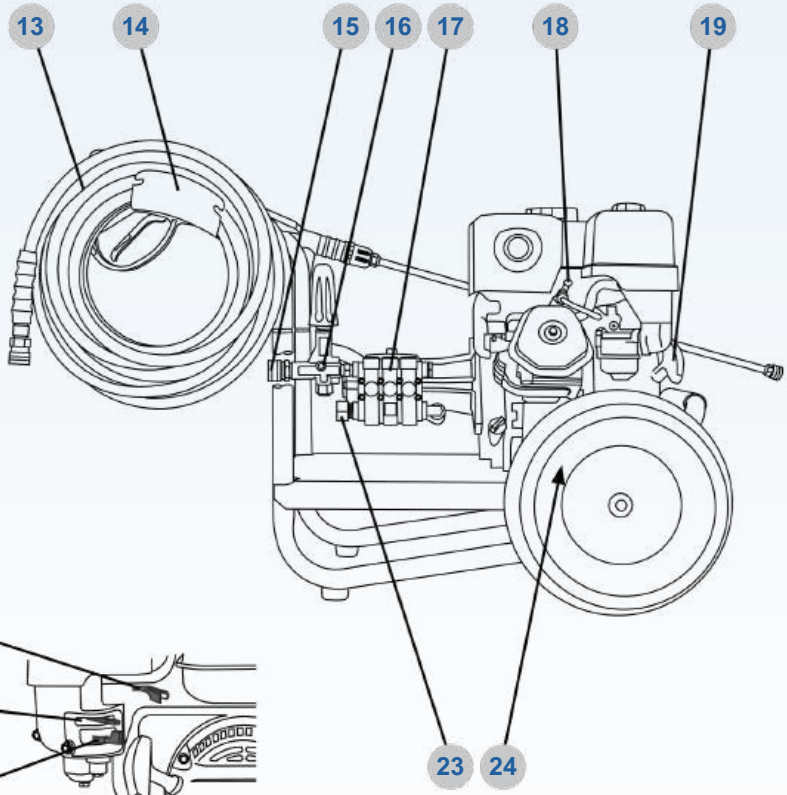





1. Spray wand quick connector
2. Engine ON/OFF switch
3. Fuel tank
4. Fuel filler cap
5. Unloader control knob
6. Spray gun holder
7. Nozzle holders
8. Spray gun
9. Spray gun trigger
10. Spray gun trigger lock
11. Wheel
12. Oil filler cap / dipstick
13. High-pressure hose
14. Hose hanger
15. High-pressure pump outlet
16. Thermal relief valve
17. Pump
18. Spark plug
19. Engine starting recoil
20. Throttle (if equipped)
21. Choke
22. Fuel valve
23. Garden hose coupler & water inlet filter
24. Engine oil drain plug (not shown)